ARMSTRONG

FILE NO:	F51.516
DATE:	Aug. 15, 2005
SUPERSEDES:	New
DATE:	New

1000 gpm with 8 x 20 Fabricated Steel Head

SUBMITTAL

VERTICAL TURBINE ELECTRIC
FIRE PUMP

FM Approved

c UL us

1000 G.P.M. _____ T.D.H.

☐ FM ☐ UL ☐ NFPA-20 ONLY

☐ APPROVAL ☐ CONSTRUCTION

MODEL 8x14M VTF
8 x 20 "F" DISCHARGE HEAD
1770 R.P.M. WATER LUBE

☐ MOTOR _____ HP _____

VOLT _____ PH _____ HZ _____

☐ CONTROLLER MODEL _____

JOB NAME. _____

ITEM NO. _____

CUSTOMER _____

ORDER NO. _____

MFG. REP. _____

DWG. NO. _____

SERIAL NO. _____

By : _____ Date : _____

NOT TO BE USED FOR CONSTRUCTION UNLESS CERTIFIED

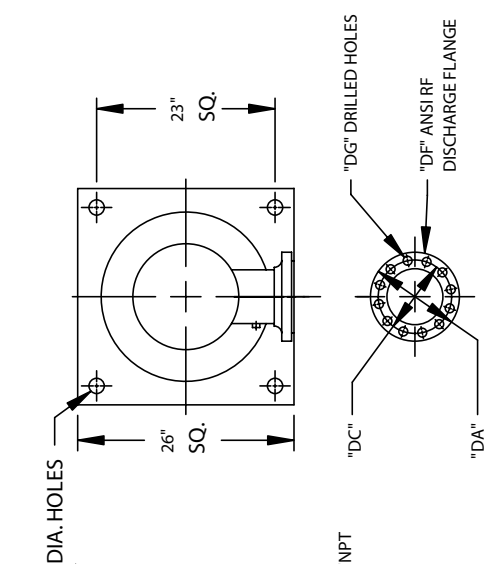

PRESS RATE	DISCHARGE FLANGE DA	DC	DD	DF	DG	DK
300 #	15	13	13	8	(12) 1	1 5/8

NO. OF STG'S.	DISCH. SIZE & RATING	AG ①	B	C
8	8/300#	61 7/8	105	1 15/16
9	"	61 7/8	114 7/8	1 15/16

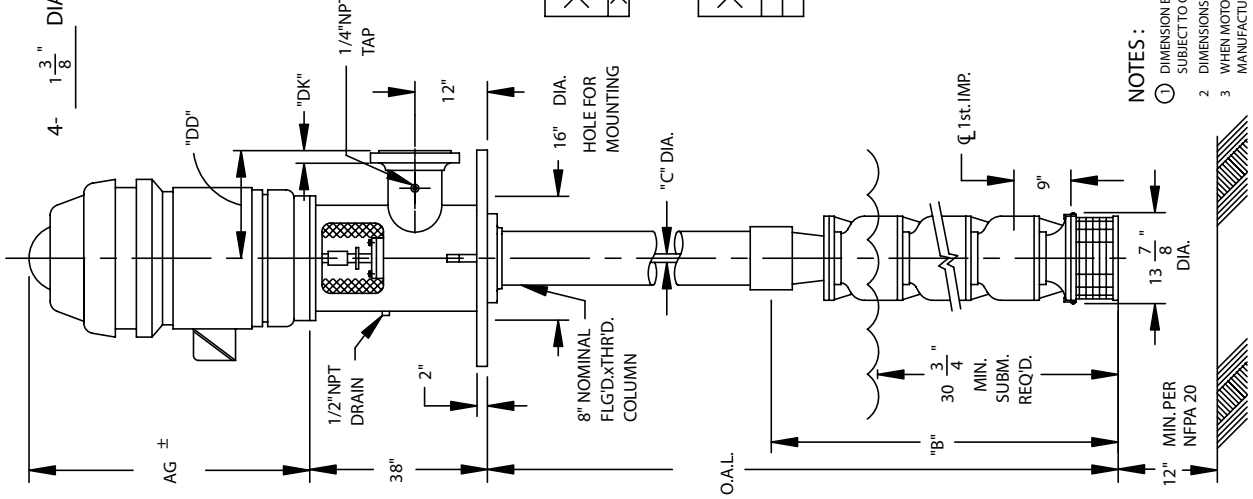

NOTES :

① DIMENSION BASED ON MOTOR HEIGHT OF A STANDARD WP-I HOLLOW SHAFT MOTOR. SUBJECT TO CHANGE DEPENDING ON MOTOR MFG. AND/OR THE USE OF A MOTOR ADAPTOR.

2 DIMENSIONS ARE IN INCHES UNLESS OTHERWISE INDICATED.

3 WHEN MOTOR IS OIL LUBRICATED, OIL IS NOT FURNISHED. SEE OPERATION MANUAL FOR MANUFACTURER'S RECOMMENDATIONS.

FP-EF-04 (REV.#3)

© S.A. Armstrong Limited 2005